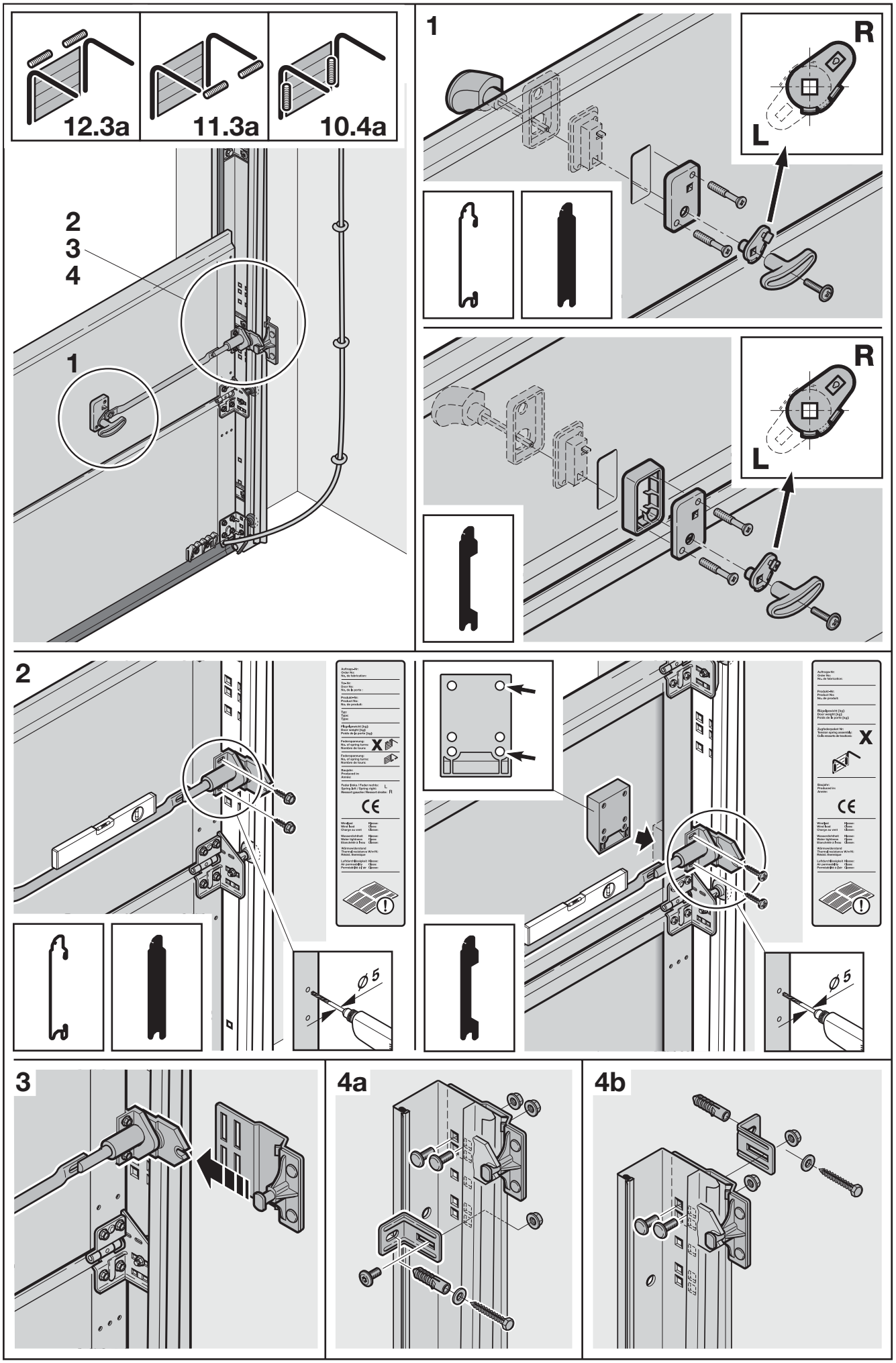
12.3a
11.3a
10.4a
2
3
4
1
1
R
L
R
L
2
X
Ø 5
X
Ø 5
3
4a
4b

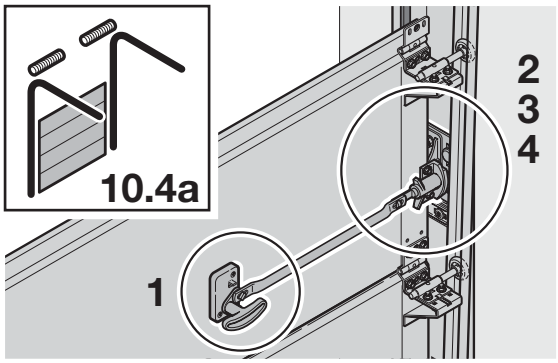
10.4a
2
3
4
1

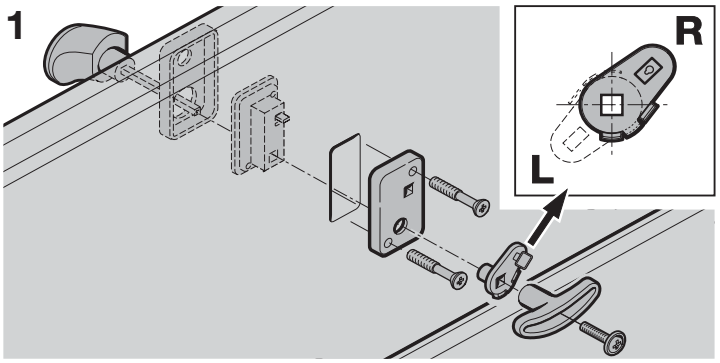
1
R
L

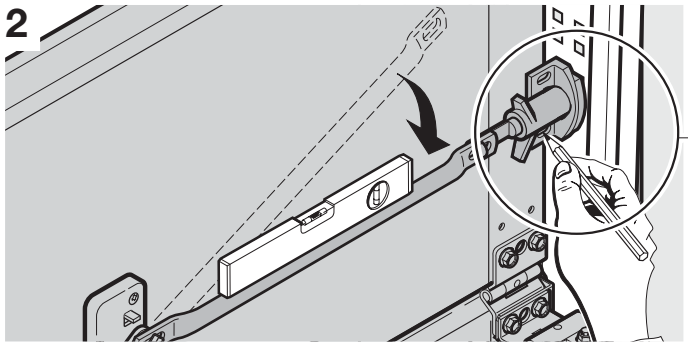
2

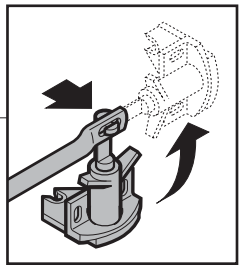

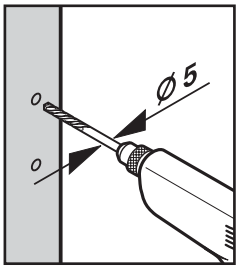
Ø 5

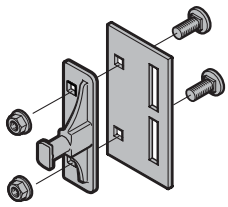
3a

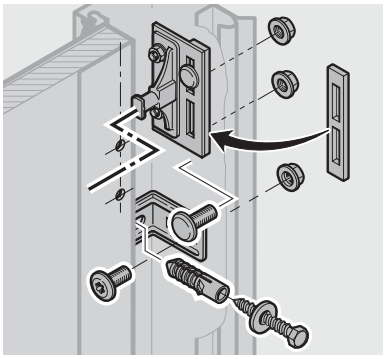

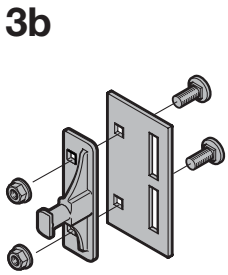
3b

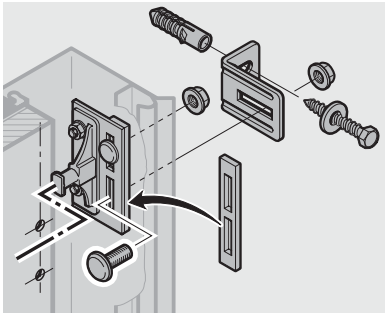

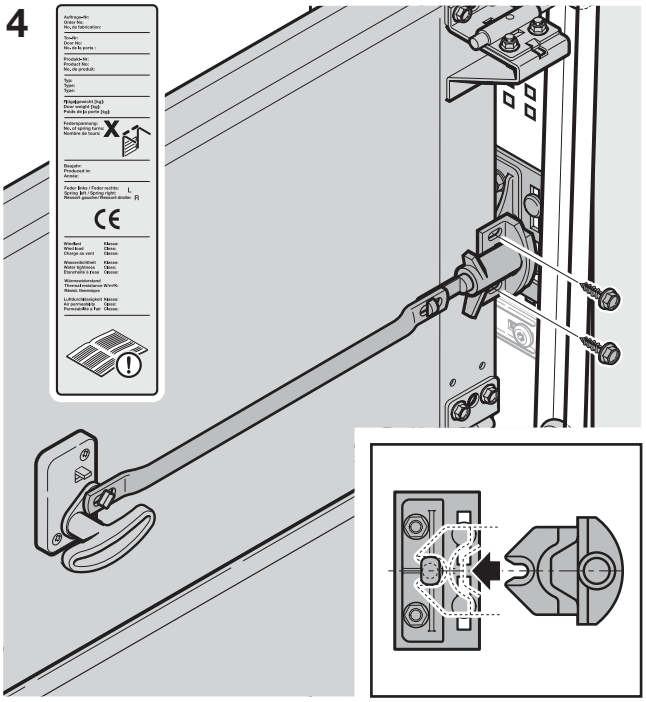
4
X
L
R

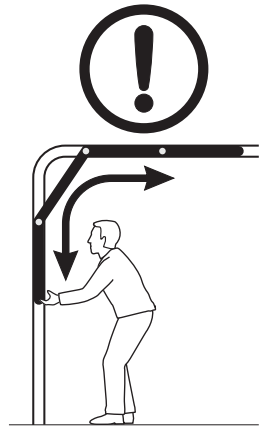

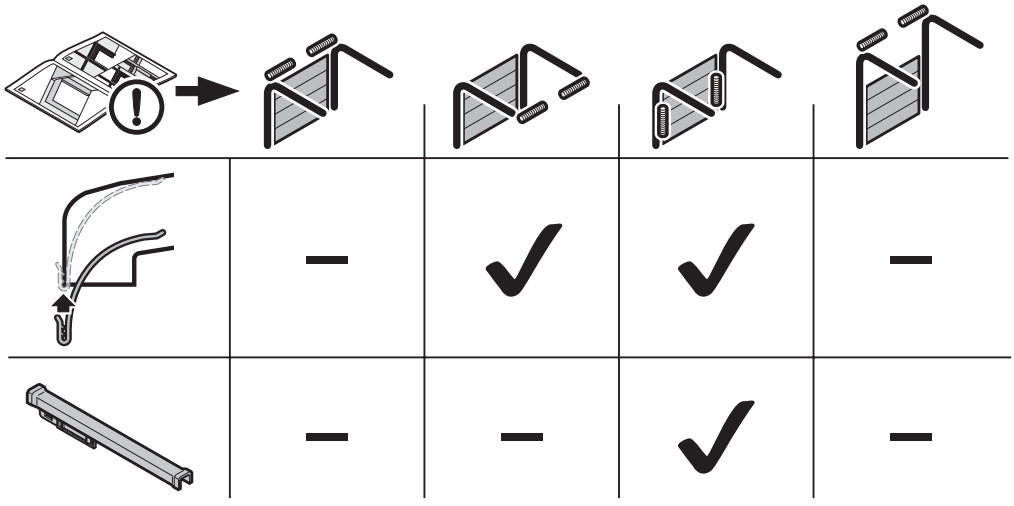
–
✓
✓
–
–
–
✓
–